KC 62

School chair to EN 1729 in four sizes and four base variants



A chair that grows with them.



KC 62

The KC 62 is a shell chair for schools, universities and further education. Four sizes to DIN EN 1729 cover every age group – from primary school pupils to adults. The polypropylene seat shell with at least 30 % recycled content has an integrated handle in the backrest and can be combined with four bases.

Sitting correctly is the foundation of focused learning. The DIN EN 1729 standard therefore defines how seat height and body size match. The KC 62 follows this system in four sizes: size 3 (seat height 350 mm, approx. 6–7 years), size 4 (380 mm, approx. 8–10 years), size 5 (430 mm, approx. 11–13 years) and size 6 (460 mm, from 14 years and for adults). Two shell sizes cover the four heights.

The shell is made of glass-fibre reinforced polypropylene with at least 30 % post-industrial recycled material and is PSV MixEco certified. Six colours are available – from pearl grey and deep blue





KC 62

to coral red, yellow, sky blue and light green. The handle moulded into
the backrest makes rearranging the classroom easy.

Base options are the 4-leg base in steel tube Ø 22 × 2 mm (all four
sizes), the 4-leg base with castors (sizes 4–6), the reverse cantilever in steel (sizes 3 and 6) and a swivel base with gas lift and 5-star base (size 6). The cantilever can be hung on the desktop for cleaning. All base variants except the swivel base stack up to five
high and are tested to EN 1729-1/-2.

KC 62 — Specifications

- four sizes to DIN EN 1729 – seat height 350, 380, 430 and 460 mm
- polypropylene seat shell with at least 30 % recycled content, PSV MixEco certified
- handle moulded into the backrest – easy to move
- four bases: 4-leg, 4-leg with castors, cantilever, swivel base
- stacks up to 5 high (all bases except swivel base)
- cantilever can be hung on the desk for cleaning
- tested to EN 1729-1 and EN 1729-2

Dimensions

Width	**533 mm**
Depth	**526 mm**
Total height	**825 mm**
Seat height	**460 mm**

Dimensions for KC 62 4L in size 6. Size 5: W 530 × D 525 × H 806 mm, seat height 430 mm. Size 4: W 444 × D 435 × H 690 mm, seat height 380 mm. Size 3: W 440 × D 420 × H 658 mm, seat height 350 mm. Castor, cantilever and swivel bases see dimension drawings.

Materials & Colours

Seat shell

Polypropylene, glass-fibre reinforced, min. 30 % recycled content (PIR), PSV MixEco – in 6 colours

4-leg base (with and without castors)

Round steel tube Ø 22 × 2 mm to UNI EN 10305-3

Cantilever

Steel (frame 5.21 kg)

Swivel base

5-star base in black plastic Ø 677 mm, gas lift, castors

Steel frame finish

Epoxy-polyester powder coating (approx. 50 µm) textured black or fine-textured light grey RAL 7035 – or chrome-plated (approx. 5 µm)

Glides

Polypropylene

Frame Colours

- **Textured black**
- **Fine-textured light grey**
  RAL 7035
- **Polished chrome**

Seat shell

- **Light green**
- **Yellow**
- **Sky blue**
- **Pearl grey**
- **Coral red**
- **Deep blue**

Model Variants

KC 62 4L	4-leg base, steel tube Ø 22 mm, glides – sizes 3, 4, 5 and 6, stacks up to 5 high
KC 62 4R	4-leg steel base with castors – sizes 4, 5 and 6, stacks up to 5 high
KC 62 CL	Reverse cantilever in steel, can be hung on the desk – sizes 3 and 6, stacks up to 5 high
KC 62 G5	Swivel base with gas lift, 5-star base in black plastic Ø 677 mm, castors – size 6, seat height 365–495 mm

alysee GmbH
Goethestraße 7 · D-66763 Dillingen/Saar
+49 6831 976122 · hello@alysee.de · www.alysee.de
Furniture and interiors for commercial projects

View this product online

Technical Drawings

KC 62 4L – 4-Bein-Gestell, Größe 6

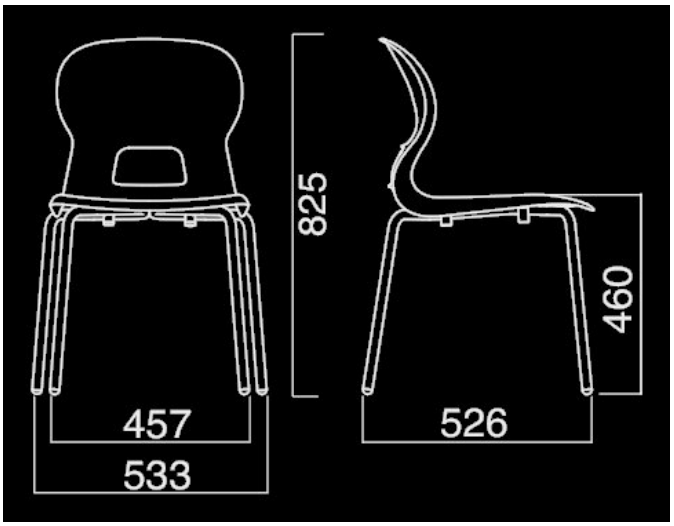

KC 62 4L – 4-Bein-Gestell, Größe 5

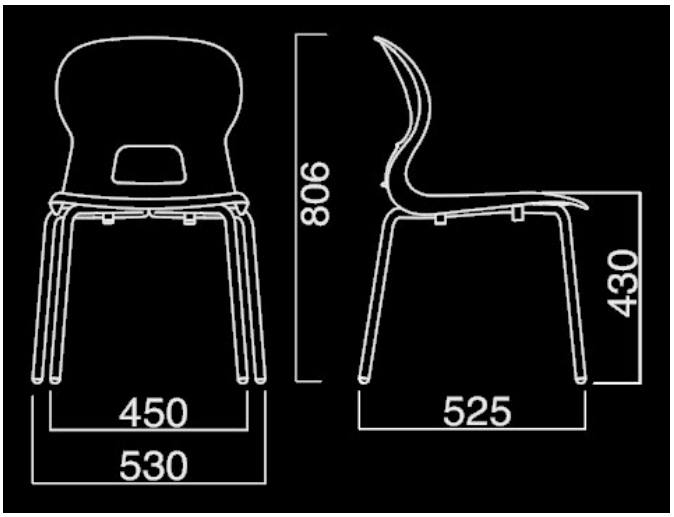

KC 62 4L – 4-Bein-Gestell, Größe 4

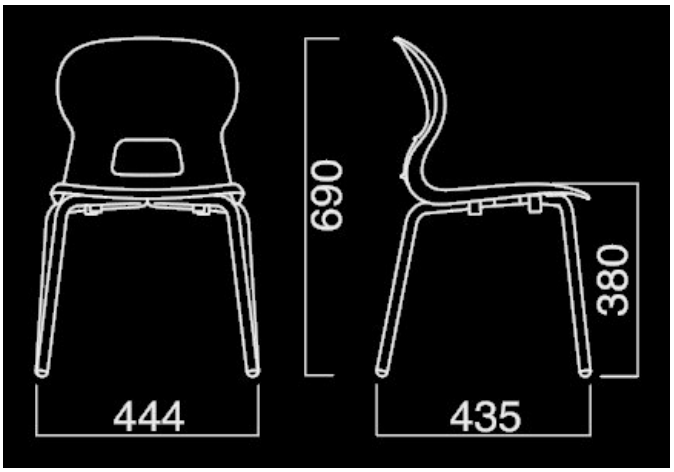

KC 62 4L – 4-Bein-Gestell, Größe 3

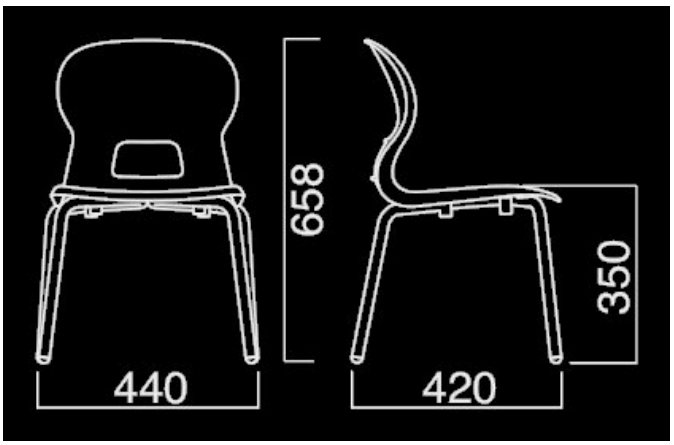

KC 62 4R – 4-Bein-Gestell mit Rollen, Größe 6

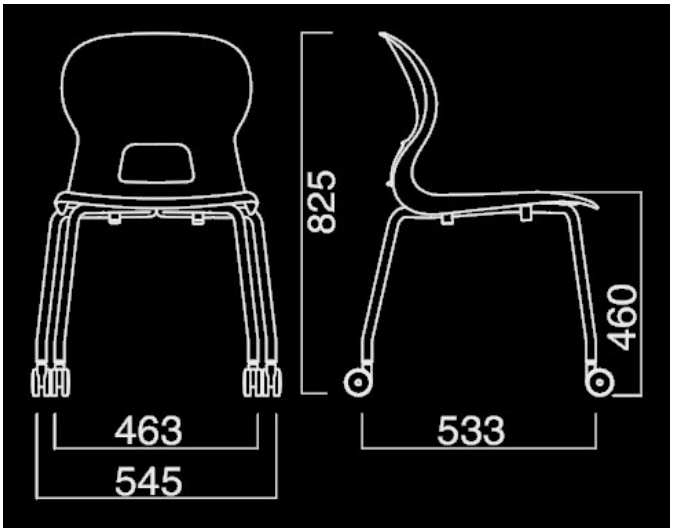

KC 62 4R – 4-Bein-Gestell mit Rollen, Größe 5

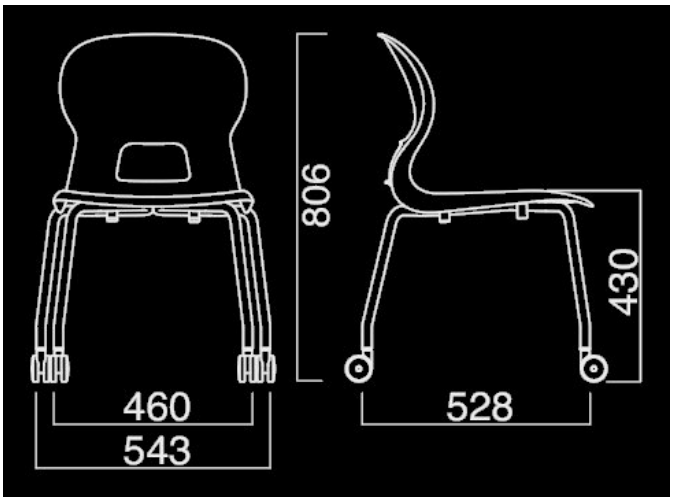

alysee GmbH
Goethestraße 7 · D-66763 Dillingen/Saar
+49 6831 976122 · hello@alysee.de · www.alysee.de
Furniture and interiors for commercial projects

View this product online

Technical Drawings

KC 62 4R – 4-Bein-Gestell mit Rollen, Größe 4

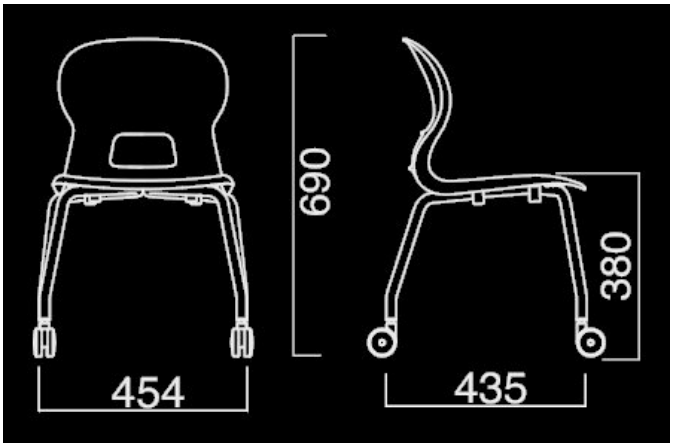

KC 62 CL – Freischwinger, Größe 6

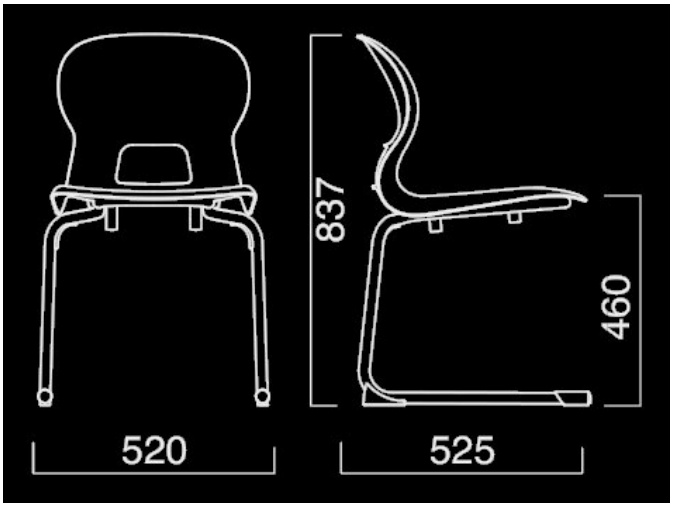

KC 62 G5 – Drehgestell, Größe 6

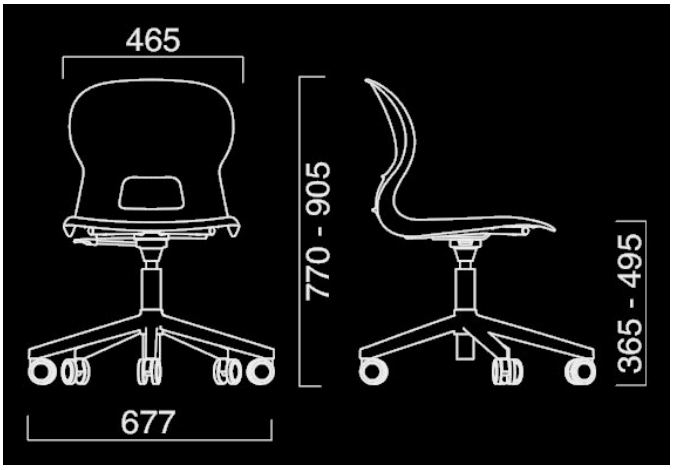

alysee GmbH
Goethestraße 7 · D-66763 Dillingen/Saar
+49 6831 976122 · hello@alysee.de · www.alysee.de
Furniture and interiors for commercial projects

View this product online